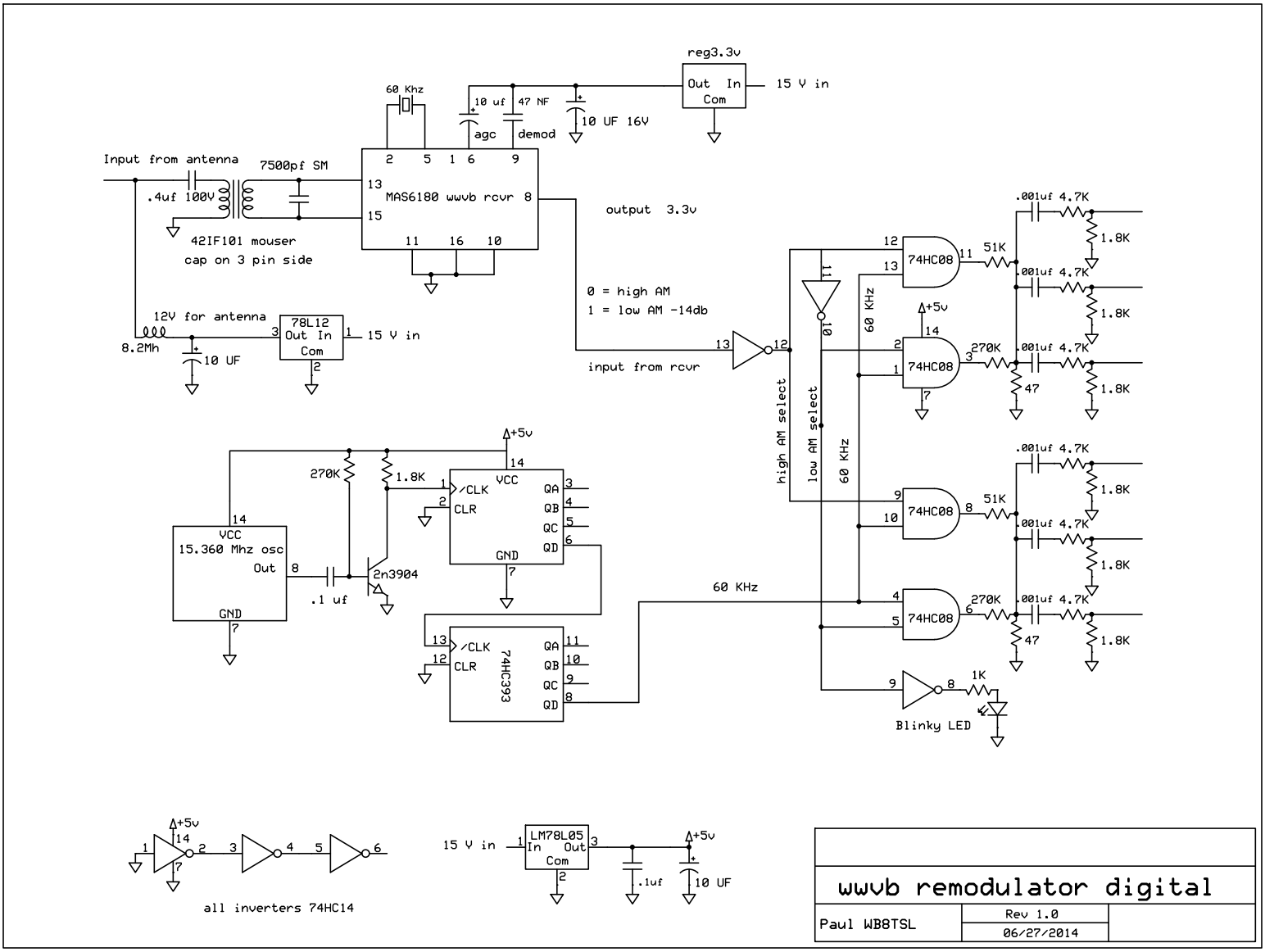
reg3.3v
Out In
Com
15 V in
60 Khz
10 uf
47 NF
agc
demod
10 UF 16V
Input from antenna
7500pf SM
.4uf 100V
MAS6180 wwvb rcvr
42IF101 mouser
cap on 3 pin side
output 3.3v
0 = high AM
1 = low AM -14db
12V for antenna
8.2Mh
10 UF
78L12
Out In
Com
15 V in
input from rcvr
74HC08
51K
270K
.001uf 4.7K
1.8K
47
+5v
high AM select
low AM select
60 KHz
VCC
15.360 Mhz osc
Out
GND
.1 uf
2n3904
/CLK
CLR
QA
QB
QC
QD
74HC393
1K
Blinky LED
all inverters 74HC14
LM78L05
In Out
Com
.1uf
10 UF
wwvb remodulator digital
Paul WB8TSL
Rev 1.0
06/27/2014